FAN Separator

The blue line

Submersible Mixer and Pumps

Submersible Mixer MSX

the blue line for mixing

FAN Submersible Motor Mixer solves your mixing problems.

- **High efficiency**
- **Enormous stirring performance**
- **For all kinds of pits**
- **Simple mounting**
- **Proven a thousand times**

Submersible Motor Mixer with lifting and lowering device

- Suitable for open and closed tanks
- Easy to install, to operate and to maintain
- Push on cross boom
- Square guiding pole 100/100 swivable – stainless steel
- Spur wheel rope winch, self locking, 900 kg tractive load, stainless cable included

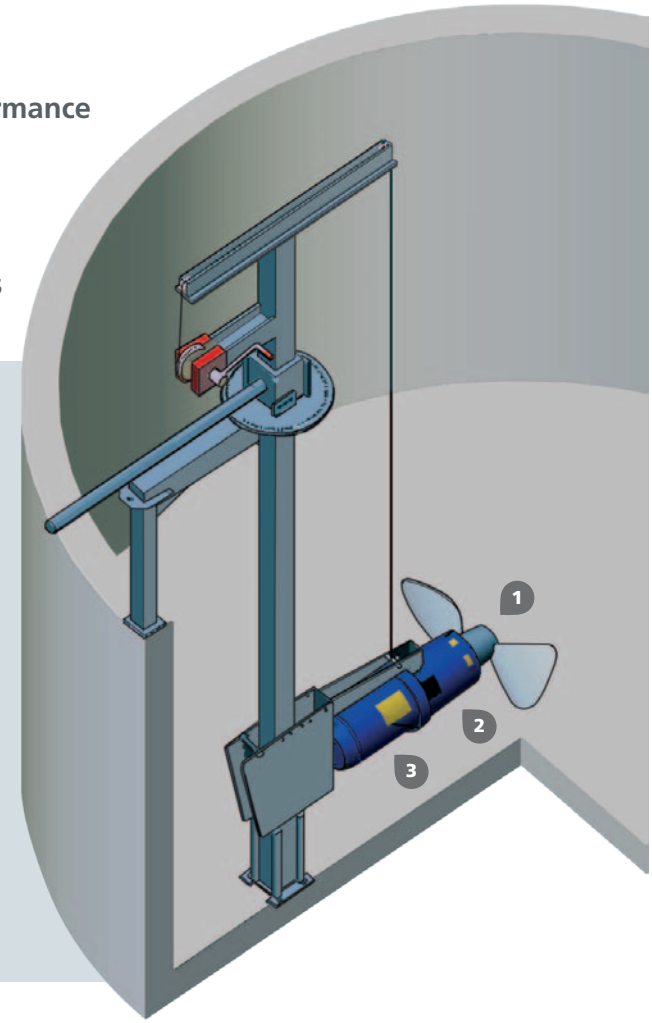

1 Stainless steel two-wing thrust propeller
Self-cleaning, high efficiency due to high diameter and special thrust edge.

2 Planetary reduction gear unit
running in oil bath, heavy-duty propeller shaft with shoulder roller bearings. The planetary drive has hardened and polished interlocking gears. A streamlined, elegant design is achieved by aligning the motor and propeller on the same axle level.

3 Submersible three-phase motor
with motor thermal guard at the winding, seal rings running in oil bath and special sturdy 8 m cable with strain relief device.

Base bearing with safety stop

The **adjustable incline guiding brackets** lead to a better mixing efficiency and a faster mixing of floating crusts and bottom sediments.

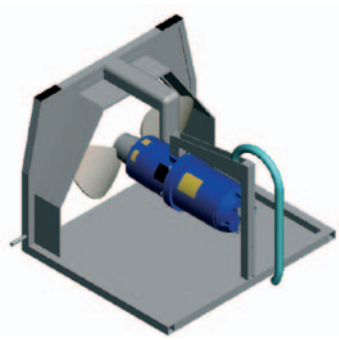

All parts in slurry range are made of stainless steel.

Mixing channel with stainless steel frame and guiding brackets for operation as a ring channel mixer.

Industrial applications • Purification

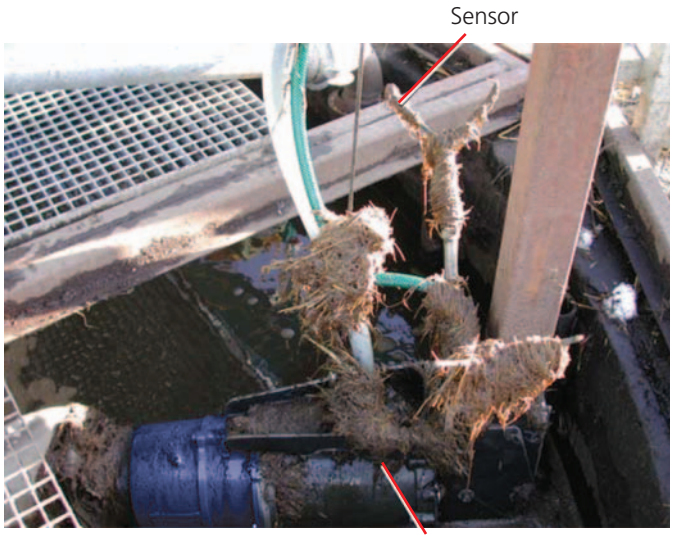

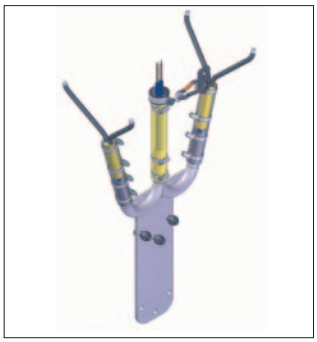

Explosion Protection

The level niveau probe is used for safety shut off in case of the agitator is emerging from the liquid inside digesters of biogas plants and is in accordance with DIN EN 50020:2003-08.

Flow Range at 0.1 m/sec

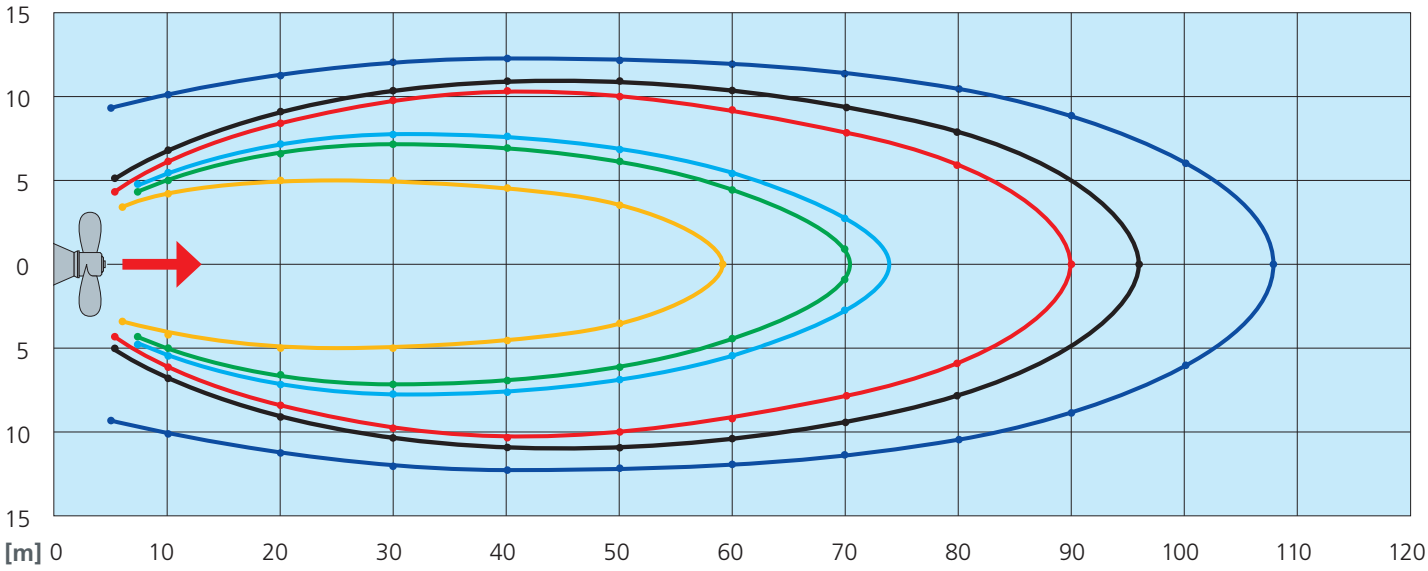

Technical data Submersible Mixer

Model	MSXH 5.5	MSXH 7.5	MSX 8.5	MSXH 11	MSX 12.5	MSXH 15
Output [kW]	5.5	7.5	8.6	11	12.6	15
Voltage [V]	400	400	240 / 480	400	240 / 480	400
Frequency [Hz]	50	50	60	50	60	50
Mixing power* [m³/h]	2 800	3 600	3 900	5 200	5 700	6 800
Pit volume* [m³]	900	1 400	1 500	2 200	2 400	2 800
Propeller [mm]	550	600	550	665	600	750
Propeller [rpm]	315	315	378	315	378	315
Weight [kg]	175	195	195	205	205	225

*) depending on media – **) MSXH with temperature class H (ambient temperature 65 °C) and leakage indicator

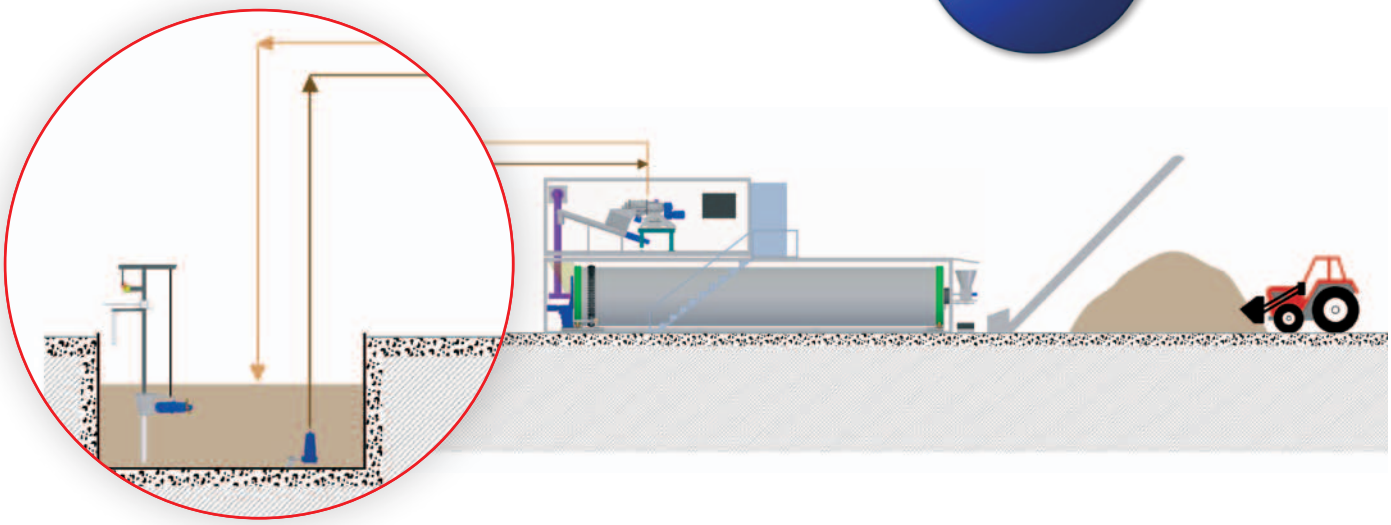

Characteristic curves MAGNUM CSP / ESP

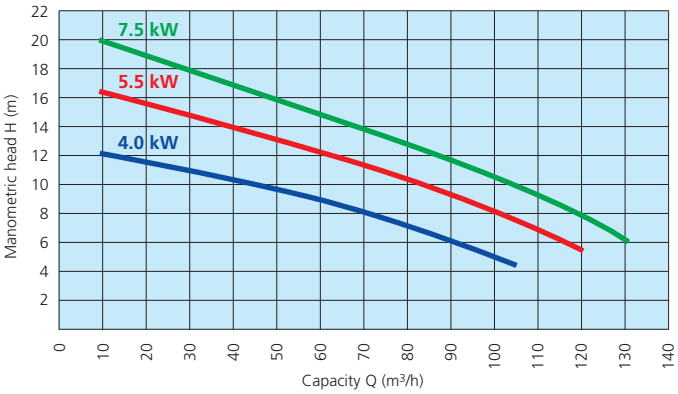

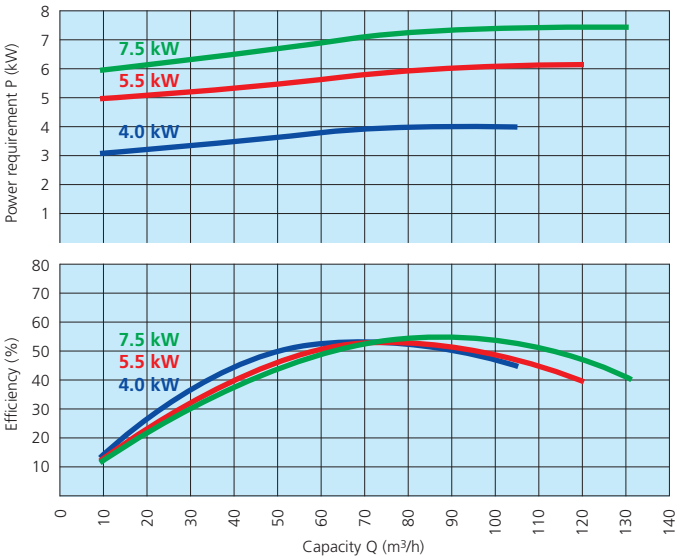

14 mm

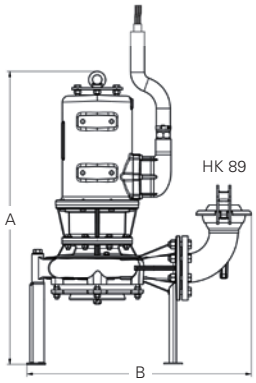

MAGNUM	ESP	CSP
A mm	910	913
B mm	666	698
Connection	HK 89	HK 89

Submersible Motor Pump MAGNUM CSP with cutting device

Model	Discharge m³/h	Discharge head m	max. drive power kW	max. Ampere	max.drive speed rpm	Delivery connection mm
CSP 4	20 – 100	12.3 – 5.9	4.0	8.1	1450	DN 80
CSP 5.5	20 – 120	19.2 – 8.2	5.5	10.7	1450	DN 80
CSP 7.5	20 – 120	19.2 – 8.2	7.5	14.9	1445	DN 80

The CSP 7.5/50 Hz has the same hydraulic values as the CSP 5.5 (but with larger cutting reserves)

Submersible Motor Pump MAGNUM ESP without cutting device

Model	Discharge m³/h	Discharge head m	max. drive power kW	max. Ampere	max.drive speed rpm	Delivery connection mm
ESP 4	20 – 100	13.0 – 7.0	4.0	8.1	1450	DN 80
ESP 5.5	20 – 120	20.0 – 9.8	5.5	10.7	1450	DN 80

Submersible Pumps MAGNUM

Original pump control with built-in thermistor tripping unit and overcurrent relay offers maximum motor protection.

- Mixing
- Rinsing with mixing line
- Tank filling
- Transfer between pits or into silo

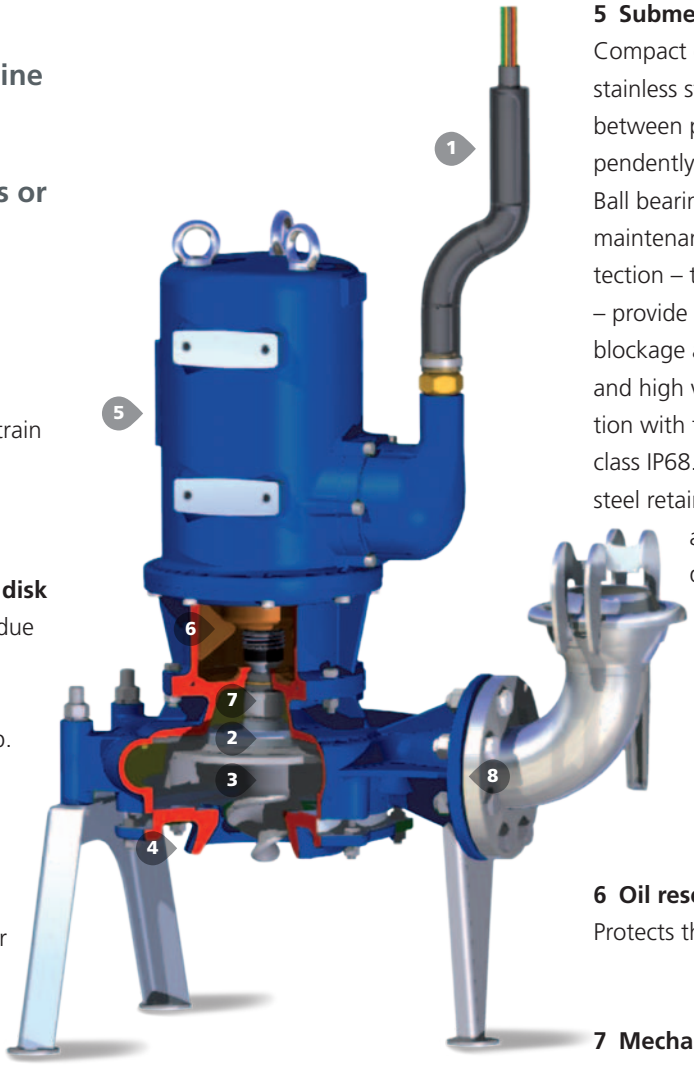

1 Strong rubber cable
12 x 2.5 cable screwing with strain relief device.

2 Flanged disk and counter disk
Wear and corrosion resistanct due to special surface treatment. Absorbs shocks when large foreign objects are chopped up.

3 Impeller
Special cast iron hardened cutting edges. Screw-type impeller centre ensures excellent pumping capacity and provides ideal conditions for pumping thick sludge.

4 Intake bell
Durable high-grade casting with hardened cutting edges. Optimum cutting effect of cutting edges and impeller. Enormous pumping.

5 Submersible three-phase motor
Compact construction. Short and stable stainless steel motor shaft. Shaft sealing between pump and motor by two independently operating mechanical seals. Ball bearings permanently lubricated and maintenance free. Thermal winding protection – temperature controlled resitors – provide protection in case of overload, blockage and phase failure as well as low and high voltage conditions (in combination with the original control). Insulation class IP68. Terminal box with 3 stainless steel retaining rings M12 – cable entry in axial direction and strain relief device in the motor compartment.

6 Oil reservoir
Protects the mechanical seals.

7 Mechanical seals
Sealing with silicon-carbide sliding surface. Suited also for abrasive media. Suitable for pumping media with pH value from 4 to 12.

8 Radial housing
Large-size pumping channel ensures free passage of thick slurry without clogging.

14 mm

www.fan-separator.de

A BAUER Group company

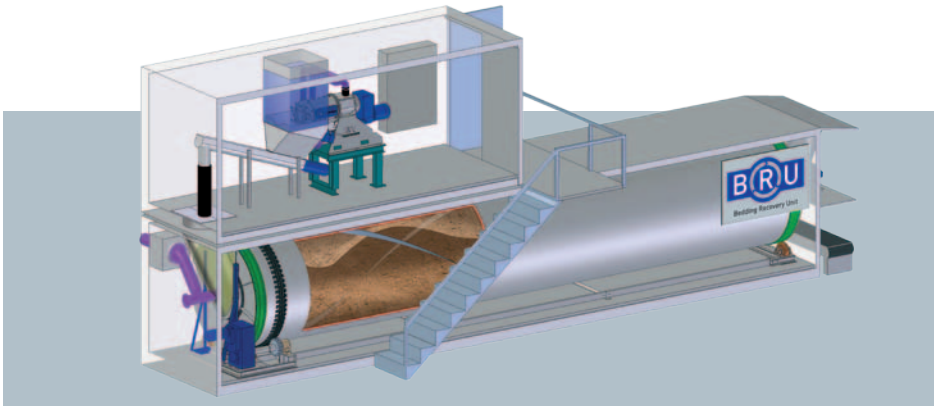

FAN Bedding Recovery Unit

FAN Press Screw Separator

FAN Centrifuge Classifier Separator

FAN Filter Oscillating Separator

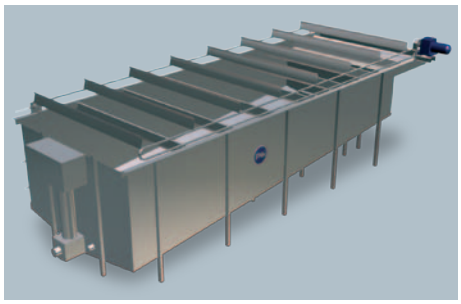

FAN Dissolved Air Flotation Unit

For a green world

RYOKUSAN

555/37 S.S.P. Tower 16th floor,
Soi Sukhumvit 63 (Ekkamai), Khlong Tan Nuea,
Vadhana, Bangkok, Thailand 10110

555/37 อาคาร เอส.เอส.พี ทาวเวอร์ ชั้น 16,
ซอย สุขุมวิท 63 (เอกมัย), แขวง คลองตันเหนือ,
เขต วัฒนา, กรุงเทพมหานคร ประเทศไทย 10110

Tel: 02-711-5470 #101 Mobile: 064-305-6600

Email: info@ryokusanasia.com

Website: www.ryokusanasia.com

Subject to change / Submersible Mixer and Pumps / 09 2012 e